MVHD-220 series

HAND LEVER **VALVE**

mindman

Specification

Model	MVHD-220-3P	MVHD-220-4P
Bore No.	8A	6A, 8A
Port size	Rc1/4	Rc1/8, Rc1/4
No.of port	3	5
No.of position	2	
Medium	Air	
Operating pressure range	0~0.8 MPa	
Effective orifice	18 mm^2	
Ambient temperature	−5~+50℃ (No freezing)	
Weight	199 g	180 g

Order example

MVHD − 220 − 4P − □ − G

- MODEL
- BODY WIDTH
- **3**: 3way(3port)
  4: 4way(5port)
- ACTUATOR TYPE
  P: Push-pull
- BORE SIZE
  Blank: Rc1/4
  6A: Rc1/8
  (Only for **4P**)
- PORT THREAD
  Blank: Rc thread
  G: G thread
  NPT: NPT thread

Panel mounting hole

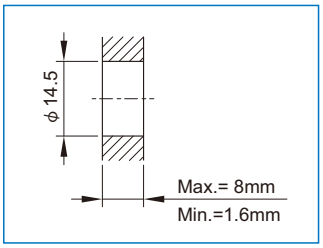

MVHD-220-3P

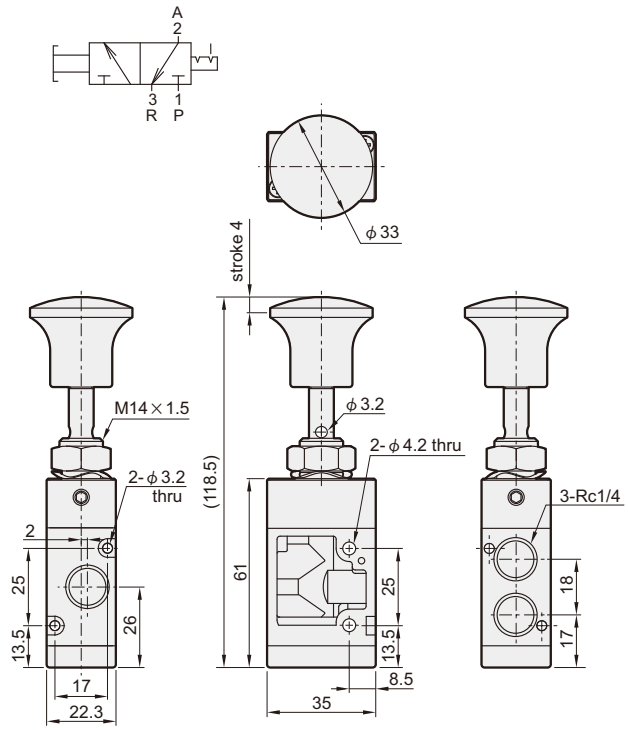
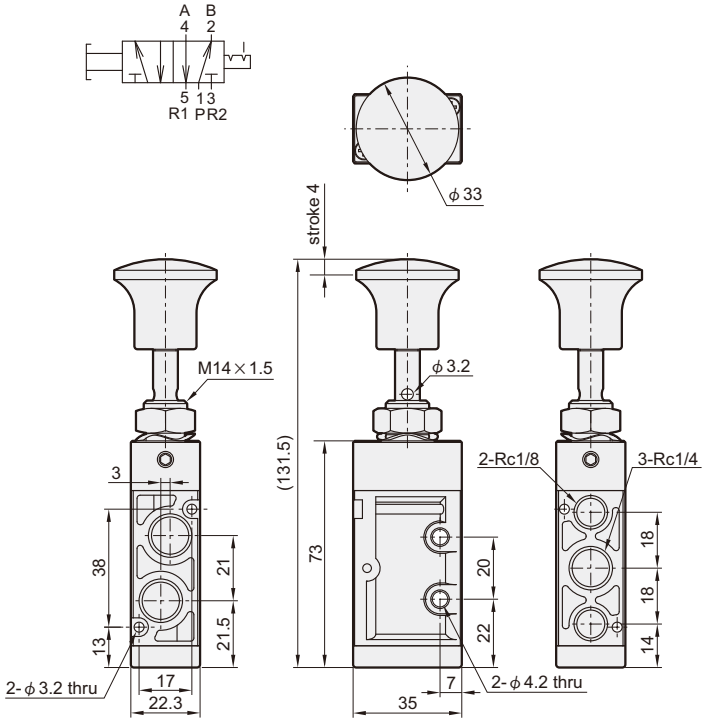
MVHD-220-4P